Thermopile sensor unit

TSUP-A1D08A-BU-50-60

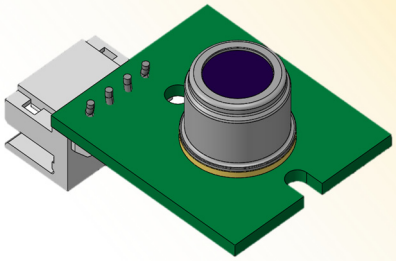

■ **Applications** Air-conditioner
(Floor temperature monitor)
Target temperature -20～60℃

■ **Feature** Thermopile sensor Unit (SMBus comms)
8 array element

Dimensions

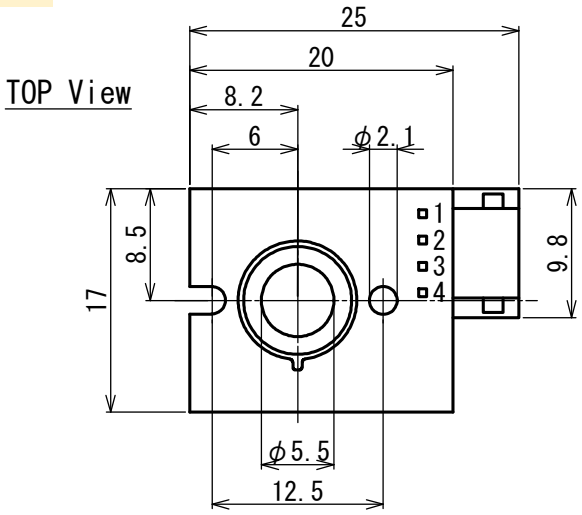

FOV

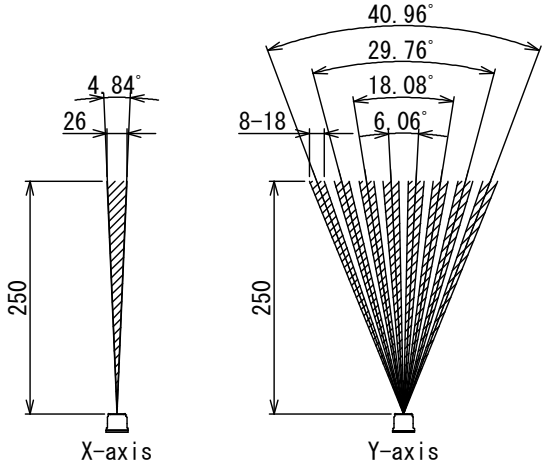

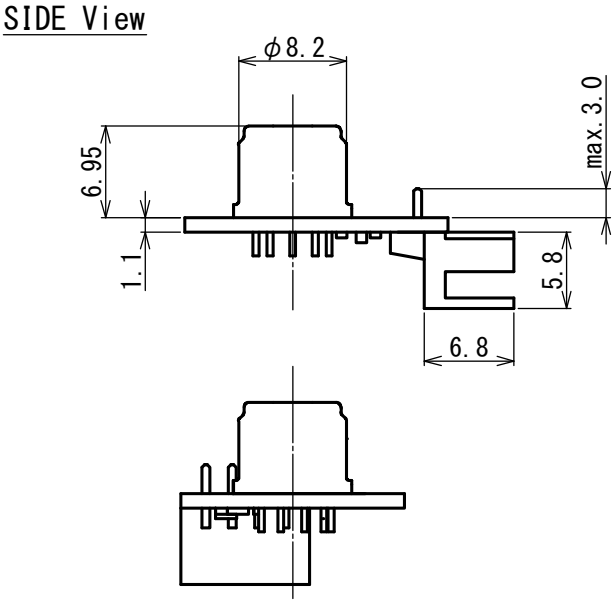

Tolerance with no specified : +/- 0.2

Circuit diagram

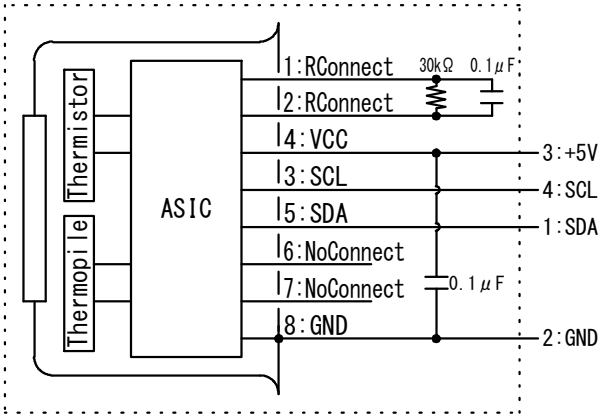

■ Main Parameter

Parameter	Condition	Spec.			Unit
		Min.	Typ.	Max.	
Operating Voltage		4.5	5	5.5	V
Detection Temperature		-20		60	℃
Operating Temperature		-20		100	℃
Storage Temperature		-30		105	℃
Accuracy	Tobj=40℃、Tamb=25℃	-2		+2	℃
Time Constant				200	msec.