Thermopile sensor Unit

TSUP-A3D01S-CU-50-300

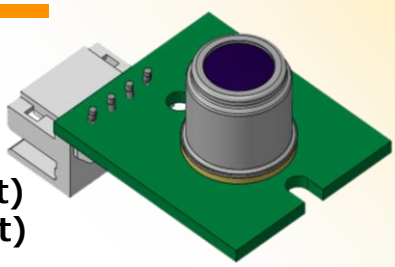

■ **Applications** IH Cooker(Pot surface temperature detection)
Target temperature -20～300℃

■ **Feature** Thermopile sensor Unit(I2C output)
Focused detection(Single element)

Dimensions

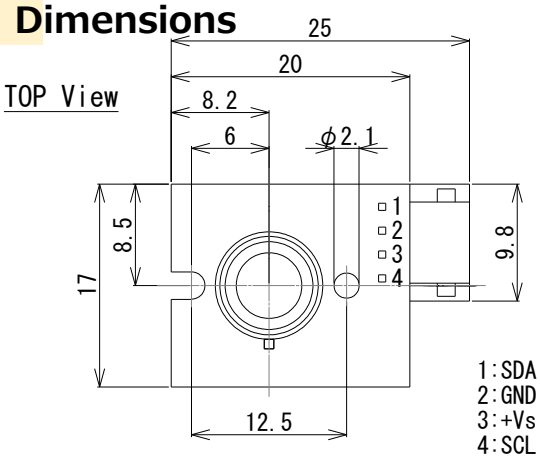

FOV

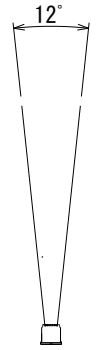

X, Y-axis

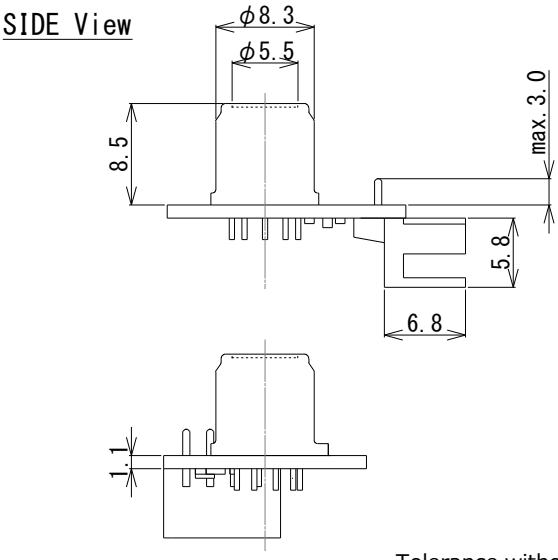

Circuit diagram

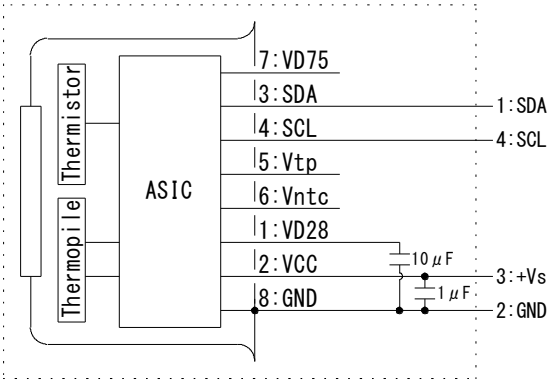

Tolerance without instruction : +/- 0.2

■ Main Parameters

Parameters	Condition	Spec.			Units
		Min.	Typ.	Max.	
Operating Voltage		4.5	5	5.5	V
Detection Temperature		-30		400	℃
Operating Temperature		-20		100	℃
Storage Temperature		-30		105	℃
Accuracy		-3		+3	℃
Time Constant	First time only 49.4msec.	29.4			msec.